3 July 1959, Volume 130, Number 3366 SCIENCE

Reasoning Foundations of Medical Diagnosis

Symbolic logic, probability, and value theory aid our understanding of how physicians reason.

Robert S. Ledley and Lee B. Lusted

The purpose of this article is to analyze the complicated reasoning processes inherent in medical diagnosis. The importance of this problem has received recent emphasis by the increasing interest in the use of electronic computers as an aid to medical diagnostic processes (*1, 2*). Before computers can be used effectively for such purposes, however, we need to know more about how the physician makes a medical diagnosis.

If a physician is asked, "How do you make a medical diagnosis?" his explanation of the process might be as follows. "First, I obtain the case facts from the patient's history, physical examination, and laboratory tests. Second, I evaluate the relative importance of the different signs and symptoms. Some of the data may be of first-order importance and other data of less importance. Third, to make a differential diagnosis I list all the diseases which the specific case can reasonably resemble. Then I exclude one disease after another from the list until it becomes apparent that the case can be fitted into a definite disease category, or that it may be one of several possible diseases, or else that its exact nature cannot be determined." This, obviously, is a greatly simplified explanation of the process of diagnosis, for the physician might also comment that after seeing a patient he often has a "feeling about the case." This "feeling," although hard to explain, may be a summation of his impressions concerning the way the data seem to fit together, the patient's reliability, general appearance, facial expression, and so forth; and the physician might add that such thoughts do influence the considered diagnoses. No one can doubt that complex reasoning processes are involved in making a medical diagnosis. The diagnosis is important because it helps the physician to choose an optimum therapy, a decision which in itself demands another complex reasoning process.

This complex reasoning process must be integrated by the physician with a large store of possible diseases. It is widely believed that errors in differential diagnosis result more frequently from errors of omission than from other sources. For instance, concerning such errors of omission, Clendening and Hashinger (*3*) say: "How to guard against incompleteness I do not know. But I do know that, in my judgment, the most brilliant diagnosticians of my acquaintance are the ones who do remember and consider the most possibilities."

Computers are especially suited to help the physician collect and process clinical information and remind him of diagnoses which he may have overlooked. In many cases computers may be as simple as a set of hand-sorted cards, whereas in other cases the use of a large-scale digital electronic computer may be indicated. There are other ways in which computers may serve the physician, and some of these are suggested in this paper. For example, medical students might find the computer an important aid in learning the methods of differential diagnosis. But to use the computer thus we must understand how the physician makes a medical diagnosis. This, then, brings us to the subject of our investigation: the reasoning foundations of medical diagnosis and treatment.

Medical diagnosis involves processes that can be systematically analyzed, as well as those characterized as "intangible." For instance, the reasoning foundations of medical diagnostic procedures are precisely analyzable and can be separated from certain considered intangible judgments and value decisions. Such a separation has several important advantages. First, systematization of the reasoning processes enables the physician to define more clearly the intangibles involved and therefore enables him to concentrate full attention on the more difficult judgments. Second, since the reasoning processes are susceptible to precise analysis, errors from this source can be eliminated. Of course, the methods presented in this paper are not designed for immediate, direct application; rather, they serve as a suggested basis from which more practical procedures can be developed. However, a consideration of foundations is always essential as the first step in the development of practical applications.

The reasoning foundations of medical diagnosis and treatment can be most precisely investigated and described in terms of certain mathematical techniques. Before material to illustrate these techniques was selected, many of the *New England Journal of Medicine*

Dr. Ledley is a part-time member of the staff of the National Academy of Sciences–National Research Council, Washington, D.C., where he is principal investigator of the Survey and Monograph on Electronic Computers in Biology and Medicine. He is on the faculty of the electrical engineering department of George Washington University and mathematician at the Data Processing Systems Division of the National Bureau of Standards. Dr. Lusted is radiologist and associate professor at the University of Rochester School of Medicine, Rochester, N.Y.

clinicopathological exercises from Massachusetts General Hospital were studied. It has been necessary to simplify the case illustrations in order to demonstrate the calculations in their entirety.

Two well-known mathematical disciplines, symbolic logic and probability, contribute to our understanding of the reasoning foundations of medical diagnosis; a third mathematical discipline, value theory, can aid the choice of an optimum treatment. These three basic concepts are inherent in any medical diagnostic procedure, even when the diagnostician utilizes them subconsciously, or on an "intuitive" level.

As is shown below, the logical concepts inherent in medical diagnosis emphasize the fundamental importance of considering combinations of symptoms or *symptom complexes* in conjunction with combinations of diseases or *disease complexes*. This point is emphasized because often an evaluation is made of a sign or symptom (*4*) by itself with respect to each possible disease by itself, whereas consideration of the combinations of signs and symptoms that the patient does and does not have in relation to possible combinations of diseases is of primary importance in diagnosis.

The probabilistic concepts inherent in medical diagnosis arise because a medical diagnosis can rarely be made with absolute certainty; the end result of the diagnostic process usually gives a "most likely" diagnosis. The logical considerations present *alternative* possible disease complexes that the patient can have; the purpose of the probabilistic considerations is to determine which of these alternative disease complexes is "most likely" for this patient.

The value theory concepts inherent in medical diagnosis and treatment are concerned with the important value decisions that the diagnostician frequently faces when he is choosing between alternative methods of treatment. The problem facing the physician is to choose that treatment which will maximize the chance of curing the patient under the ethical, social, economic, and moral constraints of our society. As is discussed below, Von Neumann's so-called "theory of games" can be used to analyze such value decisions.

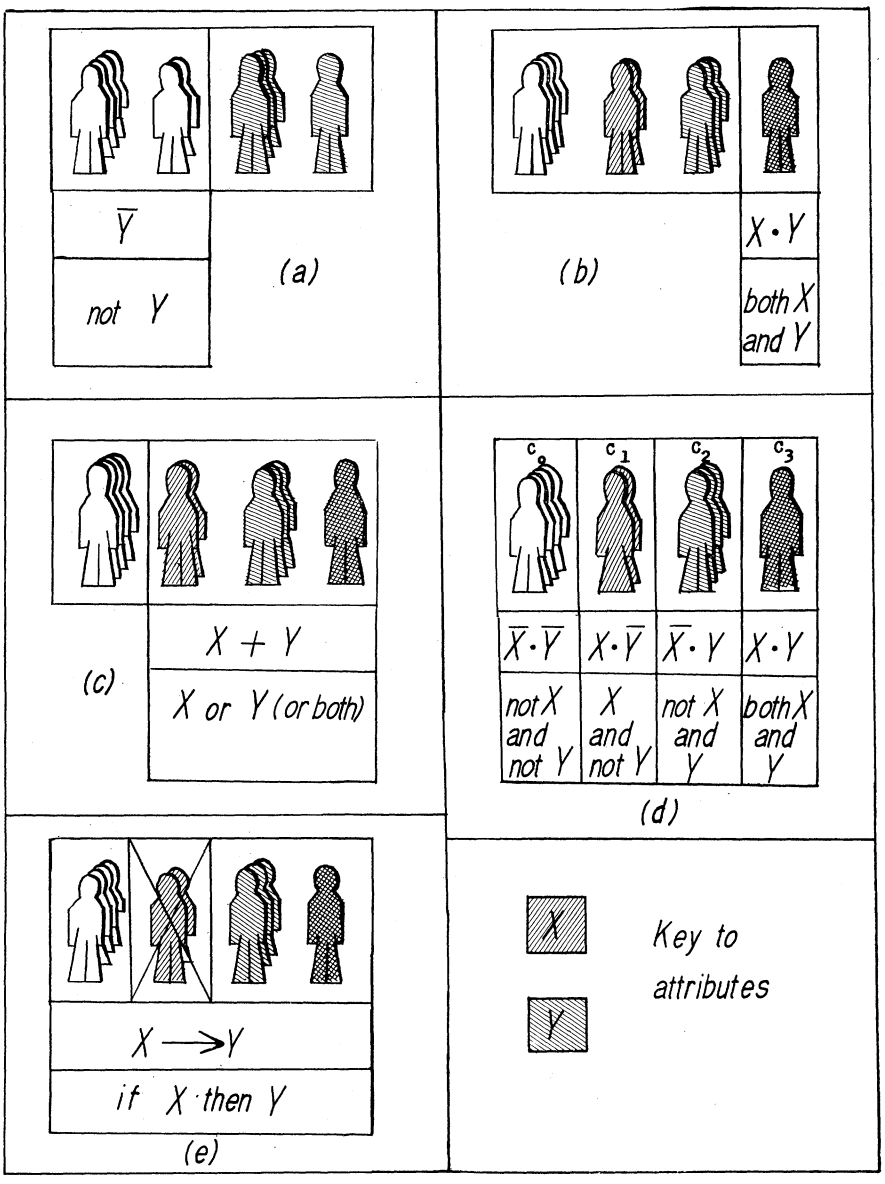

Fig. 1. Combinations of attributes.

Logical Concepts

There are three ingredients to the logical concepts inherent in medical diagnosis; these are (i) medical knowledge, (ii) the signs and symptoms presented by the patient, and (iii) the final medical diagnosis itself. Medical knowledge presents certain information about relationships that exist between the symptoms and the diseases. The patient's symptoms (*4*) present further information associated with this particular patient. With these two sources of available information, and by means of logical reasoning, the diagnosis is made.

Symbolism. The first step in making a logical analysis of this process is to review some symbolism associated with the *propositional calculus of symbolic logic.* Such symbolism enables the more precise communication of the concepts involved in logical processes. The symbols x, y, . . . are used to represent "attributes" a patient may have such as, for instance, a sign "fever" or a disease "pneumonia," and so forth. Corresponding capital letters X, Y, . . . are used to represent statements about these attributes. For example, Y represents the sentence:

The patient has the attribute y.

The negation of this statement:

The patient does not have the attribute y.

is represented by $\overline{Y}$, where the bar (called negation) over the Y indicates "not." The combination of symbols $X \cdot Y$ represents the combined statement:

The patient has both the attribute x and the attribute y.

where the center dot (called logical product) indicates "and." The combi-

Table 1. Symbolic representation of combinations of attributes.

Symbols	Name	Interpretation
$\overline{Y}$	Negation	Not Y
$X \cdot Y$	Logical product	X and Y
$X + Y$	Logical sum	X or Y (or both)
$X \rightarrow Y$	Implies	If X then Y

nation of symbols $X+Y$ represents the combined statements:

The patient has attribute x
or attribute y, or both.

where the plus sign (called logical sum) indicates "or"—that is, the "inclusive or." The sentence:

If the patient has attribute x,
then he has attribute y.

is symbolized by $X \rightarrow Y$.

All these symbols and their meanings are summarized in Table 1. But they can be most easily visualized by considering, for example, the population of patients illustrated in Fig. 1. The cross-hatched patients of Fig. 1*a* have attribute y—that is, they are those for whom Y holds. If we now consider a second attribute x for some of our patients (cross-hatched in the other direction), then Fig. 1*b* indicates these patients for whom $X \cdot Y$ holds. Similarly, Fig. 1*c* indicates those patients for whom $X+Y$ holds. In fact, with two attributes, our patients can be put into four classes, as indicated by C_0, C_1, C_2, and C_3 of Fig. 1*d*.

Figure 1*e* illustrates a population of patients where the attributes x and y have the property that "if X then Y." Here, note that the patients for whom $X \rightarrow Y$ holds are those of C_0, C_2 and C_3 only. The situation C_1 cannot occur (because C_1 represents patients with X but not Y); hence, C_1 has been crossed out.

Of course, in general, more than two attributes are usually considered, and more complicated expressions can be formed by making combinations of attributes. Such expressions are called "Boolean functions" and are generally denoted in terms of the usual functional notation $f(X, Y, \ldots, Z)$. Similarly, for more than two attributes, we can classify the patients into more than four classes C_i. In fact, it is easy to see that for m attributes, there are 2^m possible ways the patients can and cannot have the m attributes—that is, there are 2^m of the classes C_i, namely, $C_0, C_1, \ldots, C_{2m-1}$.

For our purposes, we need only introduce attributes that are symptoms and diseases. Let the symbol $S(1)$ mean, "The patient has symptom 1," and similarly for $S(2)$, and so forth. Let the symbol $D(1)$ mean, "The patient has disease 1," and similarly for $D(2)$, and so forth. In general, a set of n symptoms,

$$S(1), S(2), \ldots, S(n)$$

and a set of m diseases,

$$D(1), D(2), \ldots, D(m)$$

will be under consideration. Which symptoms and diseases are to be included in such sets is usually dictated by the circumstances. For example, an ophthalmologist is interested in a certain collection of symptoms and diseases, whereas an orthopedist is interested in another collection.

Logical problem. By means of our symbolic language, each of the three aforementioned ingredients of medical diagnosis can be expressed in terms of Boolean functions. The relationships between diseases and symptoms that comprise medical knowledge can be expressed as a Boolean function of the diseases and symptoms under consideration, say

$$E(S(1), \ldots, S(n), D(1), \ldots, D(m))$$

Similarly, the symptoms presented by a patient can be expressed as a Boolean function of the symptoms alone, say

$$G(S(1), \ldots, S(n))$$

Then the diagnosis itself can be expressed as a Boolean function of the diseases alone, say

$$f(D(1), \ldots, D(m))$$

To illustrate these three functions E, G, and f, let us for simplicity limit our consideration to two diseases, $D(1)$ and $D(2)$, and two symptoms, $S(1)$ and $S(2)$. Let us first discuss E. Suppose the following statements were made in a diagnostic textbook concerning the relationships between $D(1)$, $D(2)$, $S(1)$, and $S(2)$:

If a patient has disease 2, he must have symptom 1	$D(2) \rightarrow S(1)$
If a patient has disease 1 and not disease 2, then he must have symptom 2	$D(1) \cdot \overline{D(2)} \rightarrow S(2)$
If a patient has disease 2 and not disease 1, then he cannot have symptom 2	$\overline{D(1)} \cdot D(2) \rightarrow \overline{S(2)}$
If a patient has either or both of the symptoms, then he must have one or both of the diseases	$S(1) + S(2) \rightarrow D(1) + D(2)$

Since all of these relations are to hold according to medical knowledge, we have for E:

$$\begin{aligned} E = {} & [D(2) \rightarrow S(1)] \cdot \\ & [D(1) \cdot \overline{D(2)} \rightarrow S(2)] \cdot \\ & [\overline{D(1)} \cdot D(2) \rightarrow \overline{S(2)}] \cdot \\ & [S(1) + S(2) \rightarrow D(1) + D(2)] \quad (1) \end{aligned}$$

To illustrate the G function is much simpler. A particular patient might present symptom 2 and not symptom 1; then we have

$$G = \overline{S(1)} \cdot S(2)$$

Note that symptoms the patient does *not* have are included as well as those the patient does have. If it is not known whether the patient does or does not have a symptom—for example, if the symptom is determined as the result of a laboratory test not yet accomplished, then this symptom does *not* appear explicitly in the function G. Thus, if the patient has symptom 2 and it is not known whether or not he has symptom 1, then $G = S(2)$.

Function f may be illustrated as follows. If the patient has disease 1 and not disease 2, then

$$f = D(1) \cdot \overline{D(2)}$$

Of course, function f is computed when the functions E and G are known. For example, as we shall presently show, if E as illustrated above describes the medical knowledge concerning $D(1)$, $D(2)$, $S(1)$, and $S(2)$, and if a patient presents

$$G = \overline{S(1)} \cdot S(2)$$

then it turns out that

$$f = D(1) \cdot \overline{D(2)}$$

Although we shall discuss a specific example below, it is important to first state the logical problem of medical diagnosis in more abstract terms. The logical aspect of the medical diagnosis problem is to determine the diseases f such that *if medical knowledge* E *is known, then: if the patient presents symptoms* G, *he has diseases* f. In terms of our symbolic language, the problem is to determine a Boolean function f that satisfies the following formula:

$$E \rightarrow (G \rightarrow f) \qquad (2)$$

This is the fundamental formula of medical diagnosis. That this is truly the diagnosis in an intuitive sense can be readily seen. For it is easy to show that the fundamental formula can be equivalently written as

$$E \rightarrow (\overline{f} \rightarrow \overline{G})$$

	C_0	C_1	C_2	C_3
$D(1)$	0	1	0	1
$D(2)$	0	0	1	1

Fig. 2. Logical basis for $D(1)$ and $D(2)$.

	C^0	C^1	C^2	C^3
$S(1)$	0	1	0	1
$S(2)$	0	0	1	1

Fig. 3. Logical basis for $S(1)$ and $S(2)$.

which means in a sense that if the diseases f are cured, then the patient's symptoms will disappear. It can be shown that a solution f always exists. We shall actually illustrate below an elementary computational technique for determining the function f in a simple situation involving two symptoms and two diseases; however, for more complicated situations where many more symptoms and diseases are involved, more advanced and powerful techniques for computing f must be used (*5–7*).

Logical basis. To illustrate the application of the elementary computational method to a specific example, we must first consider the concept of a logical basis. Actually, we have already introduced this concept in a preliminary way in Fig. 1*d*, for a logical basis displays all conceivable combinations of the attributes under consideration that a patient may have. For two attributes (as considered in Fig. 1*d*) there are four such combinations. Figure 2 illustrates how these are displayed in a logical basis corresponding to the attributes $D(1)$ and $D(2)$. The 0 indicates that the corresponding disease does not occur; the 1 indicates that it does. Each column C_i represents a *disease complex,* that is, C_0 represents $\overline{D(1)} \cdot \overline{D(2)}$), C_1 represents $D(1) \cdot \overline{D(2)}$, and so forth. The columns represent an *exhaustive* list of conceivable complexes, that is, a patient must fit into one of these complexes. The complexes are *mutually exclusive*—that is, a particular patient can fit into only one of the complexes at a time.

Similarly, we can form a logical basis for two symptoms, as is shown in Fig. 3, where the columns are now labeled by C^k, with a superscript, and represent all conceivable symptom complexes. If we consider the four attributes $S(1)$, $S(2)$, $D(1)$, and $D(2)$, then all conceivable combinations of disease complexes and symptom complexes can be summarized by the columns on the logical basis of Fig. 4. Each column represents a different product $C^k \cdot C_i$; let us denote such a column simply by C_i^k. For example, the demarcated column in Fig. 4 corresponds to $C^1 \cdot C_2$, and we denote it by C_2^1. Thus this column C_2^1 represents the conceivable situation of a patient's having $S(1)$ but not $S(2)$, and at the same time $D(2)$ but not $D(1)$—that is,

$$S(1) \cdot \overline{S(2)} \cdot \overline{D(1)} \cdot D(2)$$

similarly, column C_3^2 (that is, $C^2 \cdot C_3$) represents the case

$$\overline{S(1)} \cdot S(2) \cdot D(1) \cdot D(2)$$

and so forth. For n symptoms and m diseases, the combined logical basis will have 2^{n+m} columns representing all conceivable combinations of symptom-disease complexes. The reader who is familiar with the binary number system will note that the columns of a logical basis with b rows simply form the binary numbers from 0 to $(2^b - 1)$.

Example of elementary computation. Although a logical basis lists all conceivable symptom-disease complex combinations, it is obvious that many of these do not actually occur. Which do occur and which do not occur is information included in medical knowledge, and therefore it is natural for us to look to the E function for such information. Thus the role of the E function that embodies medical science is to reduce the logical basis from all *conceivable* combinations of disease-symptom complexes to only those that are actually *possible.* As an illustration, consider the E function of the above example (see Eq. 1). First note that it contains as a term the expression $D(2) \rightarrow S(1)$. This means that if a patient has $D(2)$ then he must have $S(1)$, and hence the combination of a patient having $D(2)$ and not $S(1)$—that is, $\overline{S(1)}$—cannot occur; thus, for example, column C_2^0, namely

$$\begin{array}{cc} & C_0 \\ S(1) & 0 \leftarrow \\ S(2) & 0 \\ D(1) & 0 \\ D(2) & 1 \leftarrow \\ & C_2 \end{array}$$

cannot occur. Similarly it can be checked that columns C_2^2, C_3^0, and C_3^2 cannot occur, for each of these represents patients who have at least disease $D(2)$ but do not have symptom $S(1)$ (see Fig. 4 and Fig. 1*e*). Also the expression

$$D(1) \cdot \overline{D(2)} \rightarrow S(2)$$

is included in E; hence columns C_1^0 and C_1^1 must be eliminated. From the expression

$$\overline{D(1)} \cdot D(2) \rightarrow \overline{S(2)}$$

we find that columns C_2^2 and C_2^3 must be eliminated. Finally, the expression

$$S(1) + S(2) \rightarrow D(1) + D(2)$$

eliminates columns C_0^1, C_0^2, and C_0^3. Thus the *reduced basis* that includes the medical science information (that is, Fig. 4 with the appropriate columns omitted) is shown in Fig. 5.

We now come to the following point: If the patient presents a particular symptom complex, what possible disease complexes does he have? Consider, for example, a patient that presents the case C^2—that is,

$$G = \overline{S(1)} \cdot S(2)$$

The only column in our reduced basis that contains this symptom complex is C_1^2—that is

$$\begin{array}{cc} S(1) & 0 \\ S(2) & 1 \\ D(1) & 1 \\ D(2) & 0 \end{array}$$

(see Fig. 5). Since this is the only disease-symptom complex combination that can occur (according to medical knowledge) that includes the symptom complex $\overline{S(1)} \cdot S(2)$, it follows that the diagnosis is C_1—that is,

$$f = D(1) \cdot \overline{D(2)}$$

or the patient has disease $D(1)$ but not disease $D(2)$.

As another example, suppose the patient presented C^1—that is,

$$G = S(1) \cdot \overline{S(2)}$$

then we must consider both column C_2^1 and column C_3^1, since both of these columns include the $S(1) \cdot \overline{S(2)}$ symptom complex. Thus there are two possible disease complexes that the patient may have, C_2 or C_3. Thus,

$$f = \overline{D(1)} \cdot D(2) + D(1) \cdot D(2)$$

—that is, the patient has disease $D(2)$ and it is not known whether he has $D(1)$ or not; either further tests must be taken or else medical knowledge cannot tell whether or not he has $D(1)$ under these circumstances.

Next, suppose the patient has $S(2)$,

and it is not known whether he has $S(1)$ or not—that is, C^2 or C^3, or

$$G = S(1) \cdot S(2) + \overline{S(1)} \cdot S(2)$$

In this case we consider $C_1{}^2$, $C_1{}^3$, and $C_3{}^3$, whence the patient has C_1 or C_3—that is,

$$f = D(1) \cdot \overline{D(2)} + D(1) \cdot D(2)$$

or the patient certainly has $D(1)$ but it is not known whether he has $D(2)$ or not.

We have thus demonstrated how, from the reduced basis that embodies medical knowledge and from the symptom complexes presented by the patient, we can determine the possible disease complexes the patient may have, which is the medical diagnosis.

Probabilistic Concepts

Need for probabilities. In the previous section we considered statements such as, "If a patient has disease 2, he must have symptom 2." While such positive statements have a place when, for example, some laboratory tests are being discussed, it is also evident that in many cases, the statement would read, "If a patient has disease 2, then there is only a certain *chance* that he will have symptom 2—that is, say, approximately 75 out of 100 patients will have symptom 2." Since "chance" or "probabilities" enter into "medical knowledge," then chance, or probabilities, enter into the diagnosis itself. At present it may generally be said that specific probabilities are rarely known; medical diagnostic textbooks rarely give numerical values, although they may use words such as "frequently," "very often," and "almost always." However, as is shown below, it is a relatively simple matter to collect such statistics. Since we are considering topics from an essentially academic point of view, we shall assume that the probabilities are known or can be easily obtained, and we shall discuss methods of utilizing such probabilities in the medical diagnosis. Actually, such a discussion makes clear in any particular circumstances precisely which statistics should be taken and presents methods for rapidly collecting them in the most useful form.

Total and conditional probabilities. The first step in discussing a probabilistic analysis of medical diagnosis is to review some definitions and important properties of probabilities. The concept of total probability is concerned with the following question. Suppose we select at random from our population of patients one single patient; what is the chance, or *total* probability, that the patient chosen has certain specified attributes $f(x, y, \ldots, z)$? By definition, the total probability is the ratio of the number of patients that have these attributes to the *total* number of patients from which the random selection is made. If the total number of patients is N, and if $N(f)$ is the number of these patients with attributes f, then the total probability that a patient has attributes f is:

$$P(f) = N(f)/N \qquad (3)$$

For example, the probability that a patient has disease complex C_i becomes:

$$P(C_i) = N(C_i)/N \qquad (4)$$

The *conditional probability* is analogous to the total probability, where the selection is made only from that subpopulation of patients that have the specified condition. The conditional probability, denoted by $P(G|f)$, that from patients having condition or attributes f, a single patient selected at random will also have attributes G is defined as the ratio of the number of patients with both attributes $G \cdot f$ to the number of patients having attributes f. [Note: In this notation the condition appears to the right, and the attribute of selection to the left, of the vertical bar: $P(\text{attribute}|\text{condition})$.] Thus we can write:

$$P(G|f) = P(G \cdot f)/P(f) \qquad (5)$$

For example, the conditional probability that a patient with disease complex C_i has symptom complex C^k becomes:

$$P(C^k|C_i) = N(C^k \cdot C_i)/N(C_i) \qquad (6)$$

Probabilistic problem. The results of the logical analysis of medical diagnosis often leave a choice about the possible disease complexes that the patient may

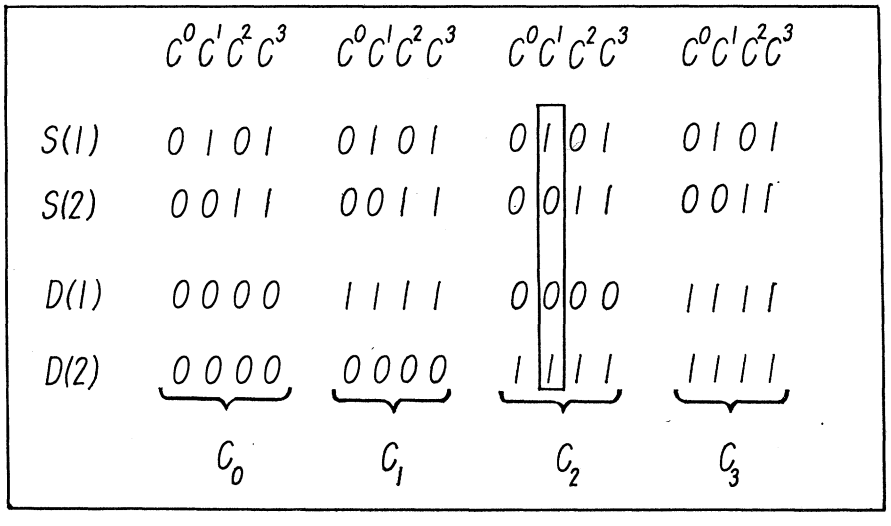

Fig. 4. Logical basis for $S(1)$, $S(2)$, $D(1)$, and $D(2)$.

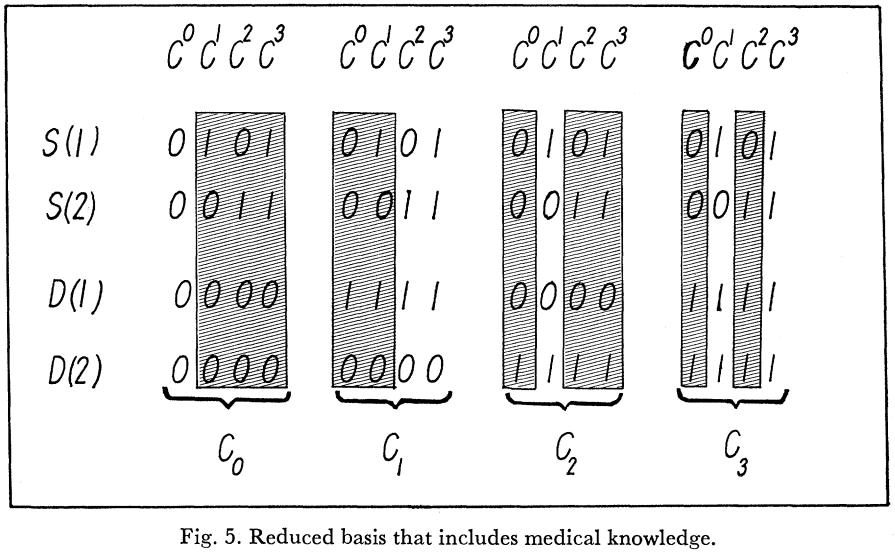

Fig. 5. Reduced basis that includes medical knowledge.

have. The problem now is: Which of these choices is most probable—that is, which of the disease complexes given by the logical diagnosis function f is the patient most likely to have. In terms of conditional probabilities, the probabilistic aspect of the diagnosis problem is to determine the probability that a patient has diseases f where it is known that the particular patient presents symptoms G, that is, the probabilistic aspect of medical diagnosis is to evaluate $P(f|G)$ for a particular patient.

The data upon which the evaluation of $P(f|G)$ is based must, of course, come from medical knowledge. Such medical knowledge is generally also given in the form of conditional probabilities—namely, the probability that a patient having disease complex C_i will have symptom complex C^k, or $P(C^k|C_i)$. The reason medical knowledge takes this form is because this conditional probability is relatively independent of local environmental factors such as geography, season, and others, and depends primarily on the physiological-pathological aspects of the disease complex itself. Thus the study of the disease processes as a cause for the resulting possible symptom complexes can be expressed as such conditional probabilities: of having a symptom complex on condition that the patient has the disease complex. It is interesting to note that this is also the reason most diagnostic textbooks discuss the symptoms associated with a disease, rather than the reverse, the diseases associated with a symptom.

The question that naturally arises at this point is: If medical knowledge is in the form $P(C^k|C_i)$—that is, probability of having the symptoms given the patient having the diseases—then how can we make the diagnosis $P(f|G)$—that is, the probability of having the disease given the patient having the symptoms? The answer lies in the well-known Bayes' formula (*8*) of probability. Let us first discuss the simpler case where $f = C_i$ and $G = C^k$; then it can be shown that

$$P(C_i|C^k) = \frac{P(C_i)P(C^k|C_i)}{\sum_{\omega} P(C_\omega)P(C^k|C_\omega)} \quad (7)$$

where ω under Σ indicates summation over all possible disease complexes (that is, if there are m diseases under consideration, then ω takes on values from 0 through $2^m - 1$). The important part of Eq. 7 is the numerator of the right-hand side. It has two factors, $P(C^k|C_i)$ and $P(C_i)$. The former is just the relation between C^k and C_i given by medical knowledge, which we would certainly expect as a factor in the diagnosis. However, observe the latter factor: it is the *total* probability that the patient has the disease complex in question, irrespective of any symptoms. This is the factor that takes account of the local aspects—geographical location, seasonal influence, occurrence of epidemics, and so forth. This factor explains why a physician might tell a patient over the telephone: "Your symptoms of headache, mild fever, and so forth, indicate that you probably have Asian flu—it's around our community now, you know." And the physician is more than likely right; he is using the $P(C_i)$ factor in making the diagnosis.

In the more general case, the following adaptation of Bayes' formula can be made for our purposes:

$$P(f|G) = \frac{\sum_{k \varepsilon G} \sum_{i \varepsilon f} P(C_i)P(C^k|C_i)}{\sum_{k \varepsilon G} \sum_{\omega} P(C_\omega)P(C^k|C_\omega)} \quad (8)$$

Example of a simple computation. Table 2 gives hypothetical probabilities for our example that are consistent with our previous example of two diseases and two symptoms. These conditional probabilities and total probabilities were supposed to have been obtained from clinical statistical data and medical knowledge. We can immediately observe that the conditional probabilities corresponding to columns that were eliminated by means of the logical analysis are zero. This is because these columns represent unrelated disease-symptom combinations, according to medical knowledge, and hence there are no patients having these disease-symptom complexes (see cross-hatched columns of Fig. 5).

Table 3. Summary of values associated with treatment-disease combinations.

T	C_2	C_3
$T(1)$	90/100	30/100
$T(2)$	10/100	100/100

Table 2. Illustrative values of $P(C^k|C_i)$ and $P(C_i)$.

$P(C^0\|C_0) = 1$	$P(C^1\|C_0) = 0$	$P(C^2\|C_0) = 0$	$P(C^3\|C_0) = 0$	$P(C_0) = 910/1000$
$P(C^0\|C_1) = 0$	$P(C^1\|C_1) = 0$	$P(C^2\|C_1) = 3/5$	$P(C^3\|C_1) = 2/5$	$P(C_1) = 50/1000$
$P(C^0\|C_2) = 0$	$P(C^1\|C_2) = 1$	$P(C^2\|C_2) = 0$	$P(C^3\|C_2) = 0$	$P(C_2) = 25/1000$
$P(C^0\|C_3) = 0$	$P(C^1\|C_3) = 2/3$	$P(C^2\|C_3) = 0$	$P(C^3\|C_3) = 1/3$	$P(C_3) = 15/1000$

Now suppose a patient presented symptom complex

$$G = S(1) \cdot \overline{S(2)} = C^1$$

Logical analysis shows that the diagnosis is

$$f = \overline{D(1)} \cdot D(2) + D(1) \cdot D(2)$$

The problem now is: Which disease complex does the patient most likely have,

$$C_2 = \overline{D(1)} \cdot D(2) \text{ or } C_3 = D(1) \cdot D(2)$$

To solve this problem, we calculate both $P(C_2 \mid C^1)$ and $P(C_3 \mid C^1)$ by means of Eq. 7 and Table 2, as follows:

$$\begin{aligned} P(C_2|C^1) &= [P(C_2)P(C^1|C_2)] \div \\ &\quad [P(C_0)P(C^1|C_0) + \\ &\quad P(C_1)P(C^1|C_1) + \\ &\quad P(C_2)P(C^1|C_2) + \\ &\quad P(C_3) + (C^1|C_3)] \\ &= [(25/1000)(1)] \div \\ &\quad [(910/1000)(0)] + \\ &\quad (50/1000)(0) + \\ &\quad (25/1000)(1) + \\ &\quad (15/1000)(2/3) \\ &= 25/(25+10) = 5/7 \end{aligned}$$

Similarly, we have

$$\begin{aligned} P(C_3|C^1) &= [(15/1000)(2/3)] \div \\ &\quad [(910/1000)(0) + \\ &\quad (50/1000)(0) + \\ &\quad (25/1000)(1) + \\ &\quad (15/1000)(2/3)] \\ &= 10/(25+10) = 2/7 \end{aligned}$$

Hence the chances are 5:2 that the patient has disease 2 but not disease 1, rather than both disease 1 and disease 2.

Next, suppose the patient presented

$$G = S(1) \cdot S(2) = C^3$$

The logical analysis tells us that

$$f = D(1) \cdot \overline{D(2)} + D(1) \cdot D(2)$$

That is, the patient has either

$$C_1 = D(1) \cdot \overline{D(2)} \text{ or } C_3 = D(1) \cdot D(2)$$

Determining the conditional probabilities $P(C_1|C^3)$ and $P(C_3|C^3)$ according to Table 2, we find:

$$P(C_1|C^3) = 20/(20+5) = 4/5$$

and

$$P(C_3|C^3) = 5/(20+5) = 1/5$$

Hence the chances are 4:1 that the pa-

tient most likely has disease 1 and not disease 2 rather than both diseases 1 and 2.

Statistics. In our use of probabilities we have tacitly made one subtle assumption that does not belong in the realm of the reasoning foundations of medical diagnosis, but rather in statistics. The assumption is that even though our probabilities, $P(C_i)$ and $P(C^k|C_i)$, by definition, apply only to a *randomly selected* patient from a *known* population, we of course are applying the same probabilities to a *new* patient (not among the known population) who comes to the physician for diagnosis and treatment. The reason we can apply these probabilities to this patient anyway is beyond the scope of this article; it depends on statistical considerations—considerations which, by the way, have proved exceedingly useful for solving practical problems in many walks of life. However, certain general aspects of the statistical problem can serve to illustrate some properties of our probabilistic approach to medical diagnosis.

Note that the physician has no direct control over which particular person will come to him as a patient at any time, and hence his patients are certainly randomly chosen in this sense. Also note that although the patient is not a member of the known population upon which the probabilities were based, the probabilities will apply to him if he is a person who lives under approximately the same circumstances as those of the known population. By "circumstances" we mean geographical area, local community, season of the year, and so forth.

The important results of these observations are twofold. First, since the probabilities, particularly $P(C_i)$, depend upon such circumstances, then for each physician or clinic there is a $P(C_i)$. That is to say, in general, nearly all the patients of an individual physician or clinic will be subject to the same circumstances. Thus each such physician or clinic will have its own $P(C_i)$ which, in general, will be different at different times. As discussed above, the $P(C_i \mid C^k)$ can be used by many physicians over a longer period of time.

Second, if these probabilities are so variable, from place to place and from time to time, the question arises as to how they can be evaluated at all. The answer to this is based on the fact that once a diagnosis has been made for a patient by a particular physician or clinic at a certain time, the symptom-disease complex combination that this patient has becomes itself a statistic and can be included in a recalculation of the probabilities for this physician or clinic at that time. In other words, the patient for whom the diagnosis has been made automatically becomes a part of the known population upon which the probabilities for those circumstances are based. Thus the known population becomes simply the already-diagnosed cases. Hence the probabilities $P(C_i)$ and $P(C^k|C_i)$ are continuously changing as successive diagnoses are made. Of course, the probabilities should be based on relatively current statistics; hence, after a time, the older cases are dropped from this known population. Actually this recalculation of probabilities is not hard to do. This problem is discussed below.

Value Theory Concepts

Value decisions for treatment: complicated conflict situation. After the diagnosis has been established, the physician must further decide upon the treatment. Often this is a relatively simple, straightforward application of the currently accepted available therapeutic measures relating to the particular diagnosis. On the other hand, and perhaps just as often, the choice of treatment involves an evaluation and estimation of a complicated conflict situation that not only depends on the established diagnosis but also on therapeutic, moral, ethical, social, and economic considerations concerning the individual patient, his family, and the society in which he lives. Similar complicated decision problems frequently arise in military, economic, and political situations; and to aid a more analytical and quantitative approach to these problems, mathematicians have developed "value theory." The striking similarity between these decision problems and the value decisions frequently facing the physician indicate that value theory methods can be applied to the medical decision problem as well. Of the several mathematical forms value theory has taken, we have chosen to discuss that developed principally by Von Neumann (*9, 10*), often called "game theory."

Expected value. One of the basic concepts upon which value theory rests is that of *expected value* (*8*). Suppose we consider 7000 patients, for all of whom two tentative diagnoses, C_2 or C_3, have been made, with probability 5/7 and 2/7, respectively. Suppose, also, that there exists a treatment $T(1)$ that is 90 percent effective against disease complex C_2 and 30 percent effective against disease complex C_3. If we use this treatment, what proportion of the 7000 patients should we expect to cure? The answer is given in terms of the "expected value" of the proportion E, which is the sum of the products of the value of the treatment for curing the disease complex and the probability that a patient has the disease complex. For example, about (5/7) (7000), or 5000, will have disease complex C_2, and of these we expect that 90 percent, or 4500, will be cured by $T(1)$; similarly, for those with disease complex C_3, we expect that 30 percent, or 600, will be cured by $T(1)$. Altogether, we expect that

$$\left[\left(\frac{90}{100}\right)\left(\frac{5}{7}\right)+\left(\frac{30}{100}\right)\left(\frac{2}{7}\right)\right] 7000$$

will be cured by $T(1)$. Here

$$E=\left(\frac{90}{100}\right)\left(\frac{5}{7}\right)+\left(\frac{30}{100}\right)\left(\frac{2}{7}\right)=\frac{51}{70}$$

is the expected value of the proportion of patients cured by $T(1)$.

Suppose, on the other hand, that there is an alternative treatment $T(2)$ for these diseases; it is 10 percent effective against C_2 but 100 percent effective against C_3. The problem is: With which treatment will we expect to cure more patients (see Table 3)? The expected value of the proportion cured by $T(2)$ becomes:

$$\left(\frac{10}{100}\right)\left(\frac{5}{7}\right)+\left(\frac{100}{100}\right)\left(\frac{2}{7}\right)=\frac{25}{70}$$

and hence we would expect to cure more patients with $T(1)$ than with $T(2)$. On the other hand, suppose the probability that a patient has C_2 is 2/7, that he has C_3, 5/7. Then, calculating the expected value of the proportion who will be cured by both $T(1)$ and $T(2)$ respectively, we find:

$$\left(\frac{90}{100}\right)\left(\frac{2}{7}\right)+\left(\frac{30}{100}\right)\left(\frac{5}{7}\right)=\frac{33}{70}$$

$$\left(\frac{10}{100}\right)\left(\frac{2}{7}\right)+\left(\frac{100}{100}\right)\left(\frac{5}{7}\right)=\frac{52}{70}$$

Thus $T(2)$ becomes the treatment of choice.

The process of choosing the best treatment can be described in the terminology of games. There are two players, the physician and nature. The physician is trying to determine the best strategy from his limited knowledge of nature. The matrix representation of values given in Table 3 constitutes the payoffs —what the physician will "win," and nature "lose."

For the values of the treatments as given in Table 3, let us see how the expected value E, and hence the choice of treatment, depends on the probability that the patient has C_2 or C_3. If P is the probability that a patient has C_2, then $(1-P)$ must be the probability that the patient has C_3 (since by supposition the patient has either C_2 or C_3 but not both). Hence, by Table 3, the expected value E_1 with treatment $T(1)$ becomes:

$$E_1 = .9P + .3(1-P)$$

and the expected value E_2 with treatment $T(2)$ becomes:

$$E_2 = .1P + (1-P)$$

Figure 6 illustrates the graphs of these two equations, where the points for $P=5/7$ and $P=2/7$, discussed above, are indicated. Hence $T(1)$ is the treatment of choice for P to the right of where the lines cross, and $T(2)$ is the treatment of choice for P to the left of where the lines cross.

Up to now we have considered the value of a treatment with respect to a disease complex as being measured directly by its effectiveness in curing the diseases. This, however, may not always be the case. For example, certain kinds of surgery do involve a marked risk; if the surgery is successful, the patient will be cured or benefited; if it is unsuccessful, the patient may die. Hence the value associated with this treatment is more difficult to define. As an illustration, suppose values were chosen between -10 and $+10$, as is shown in Table 4. Then, if the probability that the patient has C_2 is 5/7 and the probability that he has C_3 is 2/7,

$$E_1 = (5)(5/7) + (-10)(2/7) = 5/7$$
$$E_2 = (-5)(5/7) + (8)(2/7) = -4/7$$

so that $T(1)$ is the treatment of choice. If the probabilities were the other way around, that is, if $C_2 = 2/7$ and $C_3 = 5/7$, then we would have $E_1 = -40/7$, $E_2 = 30/7$, and $T(2)$ would be the treatment of choice.

Two points still require further discussion. First, we have considered our problem from the point of view of many patients all of whom have the diagnosis C_2 or C_3, and we have seen how to choose that treatment which will maximize the number of patients cured or maximize some other value for the patients. However, in private practice, the physician is usually concerned with a single individual patient. A little reflection will show that when we are maximizing the expected number of people cured, we are really maximizing the probability that any *individual* patient will be cured. Hence we need not actually have, say, 7000 patients; we can apply our results to a single patient. The same argument holds when more complicated values are involved.

Table 4. Values associated with treatment-disease combinations.

T	C_2	C_3
$T(1)$	+5	−10
$T(2)$	−5	+ 8

The second point is that the decision involved for assigning the value to a treatment-disease combination was not discussed at all. Then what is the advantage of our new technique? The advantage is that we have enabled the separation of the *strategy problem* from the *decision of values* problem; however, only the strategy problem was solved. The decision of values problem frequently involves intangibles such as moral and ethical standards which must, in the last analysis, be left to the physician's judgment.

Mixed strategy. In our development of the reasoning foundations of medical diagnosis for treatment, we first sketched the logical principles involved in the diagnosis; based on the alternative diagnoses presented by the logic, we calculated probabilities for these alternatives; based on these probabilities, we sketched a technique for choosing between methods of treatment. However at the present time, as we observed above, data are not generally available to enable the probabilities to be computed; and in rare diseases such data will be difficult to obtain. Hence selection of the method of treatment must frequently be made based on the logical diagnostic results alone. We now consider a method for determining the best treatment under such circumstances.

Again consider 7000 patients with identical diagnoses of C_2 or C_3, and suppose the effectiveness of alternative treatments $T(1)$ or $T(2)$ are as given in Table 3. But this time we do *not* know the probabilities that the patients have C_2 or C_3. Our problem is again to choose that treatment which will insure that we cure the largest number of people—that is, *to maximize the minimum possible number of patients that we expect will be cured.* There are actually three ways we can choose the treatment: (i) treat all patients by $T(1)$, (ii) treat all patients by $T(2)$, and (iii) treat some patients by $T(1)$ and others by $T(2)$. The first two ways are called "pure strategies," the third, a "mixed strategy."

Consider the values of Table 3, and suppose we choose the third way of treatment (which really includes the first two anyway). Let Q be the fraction of patients to be treated by $T(1)$, then $(1-Q)$ is the fraction to be treated by $T(2)$. Observe that if all the patients had C_2, we would expect to cure

$$\left[\frac{90}{100}Q + \frac{10}{100}(1-Q)\right] 7000$$

patients. We have called the bracketed expression $E(C_2)$ and have graphed it in Fig. 7. Similarly, if all the patients had C_3, we would expect to cure

$$\left[\frac{30}{100}Q + \frac{100}{100}(1-Q)\right] 7000$$

patients; we have also graphed this bracketed expression in Fig. 7. Evidently, for a particular value of Q, the lower (thick) line in Fig. 7 represents the minimum number of patients that we can expect to cure. For $Q=.6$, this minimum number is a maximum, and we would expect to cure 58 percent of the patients (or 4060 patients); hence (.6)(7000) patients should be treated by $T(1)$ and the rest, (.4)(7000), should be treated by $T(2)$.

To arrange for such a treatment is easy: Separate the patients at random into two groups, one containing $(.6)(7000) = 4200$ patients, the other containing $(.4)(7000) = 2800$ patients, the former group to receive $T(1)$, the latter $T(2)$. However, there is another way of arranging for such a treatment, as follows: As each patient comes up for treatment, spin the wheel of chance shown in Fig. 8. If the wheel stops opposite one of the numbers 0, 1, 2, 3, 4, or 5, the patient receives $T(1)$; if it stops opposite 6, 7, 8, or 9, the patient receives $T(2)$. Since there is an equal chance that the wheel will stop opposite any number, then about 0.6 of the patients will receive $T(1)$ and 0.4 will receive $T(2)$. This process is called "choosing a random number from 0 to 9." Actually, one does not need to spin a wheel of chance to get random numbers: books have been published containing nothing but millions of random numbers (*11, 12*).

Why do we bring up random numbers when all we really needed to do was

divide our 7000 patients into two groups? To treat the 7000 patients, the two-group technique is perfectly adequate; but let us consider again the physician who is concerned at the moment with a *single* patient. He cannot very well divide up the patient into two groups. To help this physician out, we interpret Q as the *probability* that the patient should receive $T(1)$, and then $(1-Q)$ is the probability that the patient should receive $T(2)$. With this interpretation, the above discussion shows that by choosing Q to be .6, the chance or probability of curing the patient is maximized to .58. Hence the physician chooses a single random integer: if it is 0, 1, 2, 3, 4, or 5, the patient gets $T(1)$; if it is 6, 7, 8, or 9, the patient gets $T(2)$. This is the concept of a *mixed strategy* applied to a single case.

Such a method for choosing the treatment may be very hard to appreciate at first contact, but this is just the method used every day when probabilities are applied to single situations. Of course, in actual practice, some further information bearing on the choice of treatment would be sought—that is to say, the formulation of the problem of which treatment to give the patient is far more complicated than that posed by the single problem discussed above. In conclusion, we may quote J. D. Williams (*13*) on the role of game theory:

"While there are specific applications today, despite the current limitations of the theory, perhaps its greatest contribution so far has been an intangible one: the general orientation given to people who are faced with overcomplex problems. Even though these problems are not strictly solvable—it helps to have a framework in which to work on them. The concepts of a strategy, the representations of the payoffs, the concepts of pure and mixed strategies, and so on, give valuable orientation to persons who must think about complicated situations."

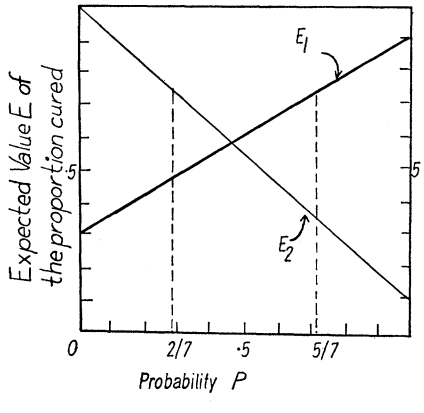

Fig. 6. Mathematical expectation of treatment.

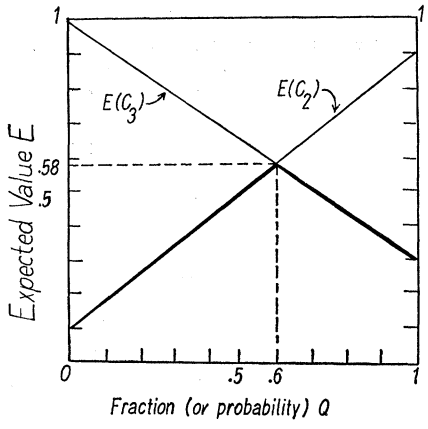

Fig. 7. Mathematical expectation in mixed strategy.

Simplified Illustration

A case history. A 5-week-old female infant was observed by the mother to have progressive difficulty in breathing during a 5-day period. No respiratory problem had been present immediately after birth.

Physical examination showed a well-nourished infant with hemangiomas (blood vessel tumors) on the lower neck anteriorly, on the left ear, and lower lip. The physical examination was otherwise negative, and all the laboratory tests were normal. X-ray examination of the chest showed a mass in the anterior superior mediastinum which displaced the trachea to the right and posteriorly. There was some narrowing of the trachea caused by the mass. Several small flecks of calcium were placed anteriorly within this mass.

The physician is thus faced with this problem: A 5-week-old infant presents increasing respiratory distress which must be relieved or the infant will die. First, what differential diagnosis should he make and, second, what should the treatment be? The physician decided that one or more of three abnormalities might be causing the respiratory distress: (i) a prominent thymus gland [hereafter referred to as $D(1)$], since it is well recognized that a large thymus can cause such distress; (ii) A deep hemangioma in mediastinum, $D(2)$, must be considered because the infant has three surface hemangiomas and therefore should have another hemangioma below the surface of the skin. (The hemangiomas had enlarged since birth.) Also, calcium such as that seen in the mass on the chest x-ray is found in blood vessel tumors; (iii) A dermoid cyst, $D(3)$, could be present in the mediastinum. The calcium in the mass suggests this possibility.

What treatments should be used? The physician decides that some treatment is absolutely necessary and that there are two possibilities, x-ray therapy to the mass or surgery.

There are some arguments for and some against each treatment. This type of problem is susceptible to value theory analysis. The physicians set up the arguments pro and con for each treatment as follows:

1) X-ray therapy to the mass [hereafter referred to as $T(1)$]. *Argument pro.* (i) If the mass is thymus, the x-ray treatment will cause it to decrease in size. (ii) If the mass is a hemangioma composed of small blood vessels, it may decrease with radiation. (iii) This treatment can be done quickly with little discomfort or immediate danger to the patient.

Argument con. (i) Radiation to the mass may cause cancer of the thyroid to develop later (*14*). (ii) Radiation will not affect the mass if it is a dermoid cyst or a large vessel-type hemangioma.

2) Surgery [hereafter referred to as $T(2)$]. *Argument pro.* (i) surgical exploration will permit the surgeon to inspect the mass and to make a definite diagnosis. (ii) If the mass is found to be a dermoid cyst, it can be removed. If the mass is thymus or hemangiomas, partial or total removal may be possible.

Argument con. (i) The infant is subject to the risks of a surgical procedure (these are concerned with general anes-

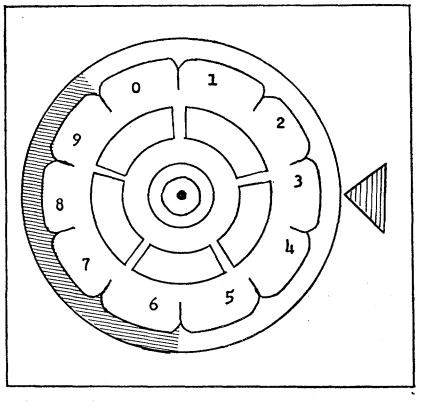

Fig. 8. Gambling wheel.

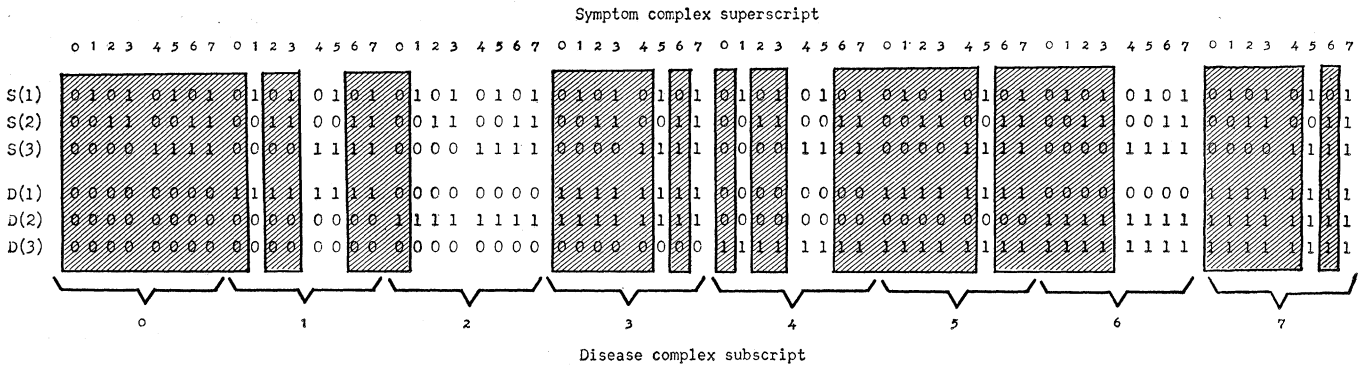

Fig. 9. Reduced logical basis for the illustrative example.

thesia and a chest operation). (ii) If the mass is a hemangioma, an attempt at surgical removal might result in bleeding which would be difficult to control and thereby add to the risk of the operation.

Setting up the illustration. The above case history suggests an appropriate simplification that we can make for purposes of illustration. Let us limit our attention to just the three diseases $D(1)$, $D(2)$, and $D(3)$ (large thymus, deep hemangioma, and dermoid cyst, respectively), the three symptoms $S(1)$, $S(2)$, and $S(3)$ (respiratory distress, several surface hemangiomas, and mediastinal mass on chest x-ray, respectively), and the two treatments $T(1)$ and $T(2)$ (x-ray therapy and surgery, respectively). Of course a realistic application of the techniques developed above would require consideration of the hundreds of diseases and symptoms associated with, say, a particular specialty. However, within the limited space allowed the present article, we are forced to confine our attention to the three diseases and three symptoms suggested by the case history. The discussion of a method permitting the feasible application of our techniques to more realistic circumstances is given in the following section.

We shall now digress for a moment from the case history in order to set up the illustration. Since we are considering only three symptoms, there are $2^3=8$ conceivable symptom complexes; for our three diseases there are likewise $2^3=8$ conceivable disease complexes; therefore there are $2^{3+3}=64$ columns in our logical basis that represents all conceivable symptom-disease complex combinations (see Fig. 9). Further, let us suppose that the population of patients under consideration is such that they can have no other symptoms or diseases than those given above, and that each patient must have at least one of the symptoms and at least one of the diseases. Let us suppose that medical knowledge consists of the following three observations:

1. A patient having $D(1)$ and also either $D(2)$ or $D(3)$ must have both symptoms $S(1)$ and $S(3)$ $\quad D(1)\cdot[D(2)+D(3)]\rightarrow S(1)\cdot S(3)$
2. If a patient does not have $D(2)$ then he does not have $S(2)$ $\quad \overline{D(2)}\rightarrow\overline{S(2)}$
3. If a patient does not have $D(1)$ but does have both $D(2)$ and $D(3)$, then he has symptom $S(3)$ $\quad \overline{D(1)}\cdot D(2)\cdot D(3)\rightarrow S(3)$

Under these observations of medical knowledge and under the limitations imposed on the population of patients under consideration, Fig. 9 represents the reduced basis embodying medical knowledge, where the noncrosshatched columns represent possible symptom-disease complex combinations consistent with medical knowledge and the population of patients selected.

Examples of logical diagnosis. Now we are ready to return to our case history. Here the patient presented symptoms $S(1)$, $S(2)$, and $S(3)$—that is,

$$G=S(1)\cdot S(2)\cdot S(3)$$

By the technique described above, it is easy to see the logical diagnosis:

$$\begin{aligned}f=&\overline{D(1)}\cdot D(2)\cdot\overline{D(3)}+\\&D(1)\cdot D(2)\cdot\overline{D(3)}+\\&\overline{D(1)}\cdot D(2)\cdot D(3)+\\&D(1)\cdot D(2)\cdot D(3)=D(2)\end{aligned}$$

which means that the patient certainly has $D(2)$, and may or may not have $D(1)$ and $D(3)$. Here, then, the logical diagnosis results in four possible disease complexes that the patient may have.

Consider next a patient that presents symptoms $S(1)$ and $S(2)$, but where the x-ray has not yet been taken—that is, $G=S(1)\cdot S(2)$. By the above techniques, we find that the logical diagnosis

$$\begin{aligned}f=&\overline{D(1)}\cdot D(2)\cdot\overline{D(3)}+\\&D(1)\cdot D(2)\cdot\overline{D(3)}+\\&\overline{D(1)}\cdot D(2)\cdot D(3)+\\&D(1)\cdot D(2)\cdot D(3)\end{aligned}$$

Note that this is the same diagnosis as for the patient with symptoms $G=S(1)\cdot S(2)\cdot S(3)$. In other words, if, when the x-ray was taken, positive results were obtained, the diagnosis remains the same as it was before the x-ray results were known. On the other hand, suppose the x-ray turned out negative; then the patient's symptoms would be

$$G=S(1)\cdot S(2)\cdot\overline{S(3)}$$

whence it is easy to see that the diagnosis becomes

$$f=\overline{D(1)}\cdot D(2)\cdot\overline{D(3)}$$

In this case the additional information obtained from the x-ray film enabled the diagnosis to be reduced from four disease complex possibilities to a unique disease complex diagnosis. This example illustrated the interesting fact that additional diagnostic information may not always result in further differentiation between disease complexes, depending on the circumstances.

As a final example of logical diagnosis, consider a patient that presents

$$G=\overline{S(1)}\cdot\overline{S(2)}\cdot S(3)$$

Here we find

$$\begin{aligned}f=&D(1)\cdot\overline{D(2)}\cdot\overline{D(3)}+\\&\overline{D(1)}\cdot D(2)\cdot\overline{D(3)}+\\&\overline{D(1)}\cdot\overline{D(2)}\cdot D(3)+\\&\overline{D(1)}\cdot D(2)\cdot D(3)\end{aligned}$$

Thus the patient must have one of these

Table 5. Values of treatments for disease complexes.

T	C_1	C_2	C_4	C_6
X-ray $T(1)$	+3	−2	−3	−2
Surgery $T(2)$	−2	+6	+10	+8

four possible disease complexes. In this case the logical diagnosis, while narrowing down the possibilities, does not seem sufficient. Therefore let us determine which of these disease complexes the patient most probably has.

Examples of probabilistic diagnosis. In order to present these examples we must have a table of conditional and total probabilities. In Fig. 10 we present such a table; however the numbers in the table do not have any basis in fact, they were just made up for the purposes of the illustration. They are, however, self-consistent in themselves and consistent with the logical assumptions made above. The cross-hatched probabilities are all 0 and correspond to symptom-disease complex combinations that are not possible according to medical knowledge.

Consider the patient with symptom complex

$$G = \overline{S(1)} \cdot \overline{S(2)} \cdot S(3) = C^4$$

We found by logical analysis that the patient can have one of the following disease complexes:

$$\begin{aligned} D(1) \cdot \overline{D(2)} \cdot \overline{D(3)} &= C_1 \\ \overline{D(1)} \cdot D(2) \cdot \overline{D(3)} &= C_2 \\ \overline{D(1)} \cdot \overline{D(2)} \cdot D(3) &= C_4 \\ \overline{D(1)} \cdot D(2) \cdot D(3) &= C_6 \end{aligned}$$

Hence, by the techniques described above, we have:

$$P(C_1|C^4) = [(.600)(.333)] \div [(.600)(.333) + (.150)(.067) + (.050)(.300) + (.005)(.200)] = .885$$

and, similarly,

$$\begin{aligned} P(C_2|C^4) &= .044 \\ P(C_4|C^4) &= .067 \\ P(C_6|C^4) &= .004 \end{aligned}$$

Thus it becomes clear that the patient most likely has

$$C_1 = D(1) \cdot \overline{D(2)} \cdot \overline{D(3)}$$

—that is, an enlarged thymus only.

Analysis of the treatment. Let us continue further with this case and determine the treatment of greatest value for the patient. For this we need a table giving the values of the two treatments under consideration for each of the disease complexes the patient may have. To fill in this table we have used the physician's considered judgment with regard to the pro and con of each treatment in relation to the disease complex. The values have been chosen between + 10 and − 10, the greatest value (the best treatment for a particular situation) being + 10, the smallest (for the worst treatment) being − 10 (see Table 5). If statistics were available on the outcomes of the different treatments for the various disease complexes, then the judgment could be replaced by a calculated probabilistic value. However, this cannot always be done in general, for the value of some treatments may involve ethical, social, and moral considerations as well.

For our patient who presented symptoms

$$G = \overline{S(1)} \cdot \overline{S(2)} \cdot S(3)$$

we determine for the value of treatment $T(1)$ (the x-ray treatment) by means of the techniques described above, as follows:

$$(3)(.885) - (2)(.044) - (3)(.067) - (2)(.004) = 2.358$$

On the other hand, the value of treatment $T(2)$ becomes

$$-(2)(.885) + (6)(.044) + (10)(.067) + (8)(.004) = -.804$$

Obviously, then, the treatment of greatest value to this patient is $T(1)$, the x-ray treatment.

Symptom complex superscript

Disease complex subscript	0	1	2	3	4	5	6	7	P(disease complex)
0	0	0	0	0	0	0	0	0	0.000
1	0	.167	0	0	.333	.500	0	0	.600
2	0	.067	.067	.200	.067	.167	.167	.265	.150
3	0	0	0	0	0	.333	0	.667	.150
4	0	.100	0	0	.300	.600	0	0	.050
5	0	0	0	0	0	1.000	0	0	.040
6	0	0	0	0	.200	.200	.200	.400	.005
7	0	0	0	0	0	.200	0	.800	.005

P(symptom complex | disease complex)

Fig. 10. Values of conditional probabilities and total probabilities for the illustrative example.

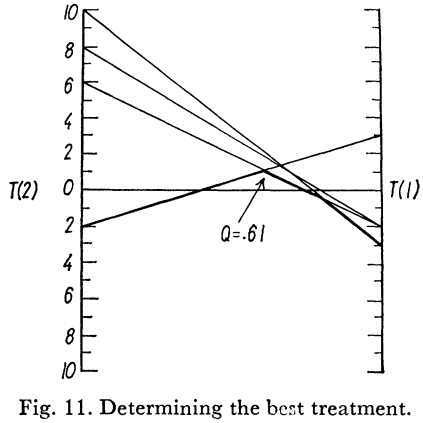

Fig. 11. Determining the best treatment.

On the other hand, suppose we did not know or could not calculate the probabilities $P(C_1|C^4)$, $P(C_2|C^4)$, $P(C_4|C^4)$, and $P(C_6|C^4)$ due to lack of sufficient statistical data or for other reasons. The problem is to choose the treatment which will maximize the minimum gain for the patient. The graphical solution of this problem according to the techniques discussed above is given in Fig. 11. Hence $T(1)$ should be chosen with probability 0.61 over $T(2)$ with probability 0.39.

Conditional Probability or Learning Device

A device often called a conditional probability or learning machine can be used to implement the foregoing logical and probabilistic analysis of medical diagnosis. The particular form of such a device that we shall describe was chosen for its extreme simplicity and ready availability. It can collect data rapidly, and it easily recalculates the probabilities at each use. With such a device the variation of $P(C_4)$ with location, season, and so forth, can be checked as well as relative stability of $P(C^k|C_i)$. As described here, it is essentially an experimental tool, but undoubtedly more sophisticated forms of the device could be further developed.

Consider the logical analysis of medical diagnosis first. In a realistic application perhaps 300 diseases and 400 symptoms must be considered as, for example, might occur within a medical specialty. The logical basis for such a set of symptoms and diseases would require 2^{700} columns (more than 10^{200}) from

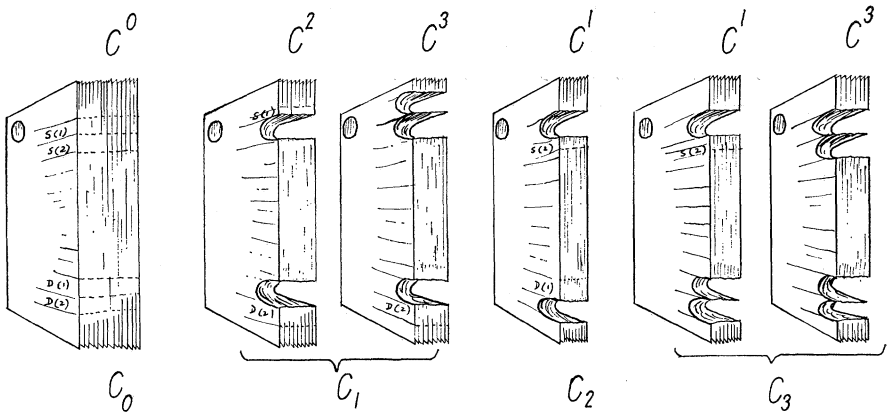

Fig. 12. Cards notched to indicate columns of logical basis.

which the elimination of columns for the reduced basis would be made. This is obviously impracticable. However, the columns to be eliminated correspond to disease-symptom complexes that will never occur; the reduced basis corresponds to columns that will occur. Hence, by listing many cases by disease-symptom complex combination, the reduced basis will soon be generated. This can be done, for example, with marginal notched cards, as follows: Positions along the edge of a card are assigned to the diseases and symptoms under consideration. After a case has been diagnosed, the positions on the edge of a single card are notched corresponding to the diseases the patient has, as well as the presented symptoms. This card then represents a column of the desired reduced basis. In this way the entire reduced basis can soon be generated (see Fig. 12).

The probabilistic analysis of medical diagnosis is obtained by notching a card for every patient who has been diagnosed. Then there will be, in general, more than one card representing a single column of the logical basis. The number of cards representing columns $C^k \cdot C_i$ is then just $N(C^k \cdot C_i)$ of Eq. 6. After a sufficient number of patients have been so recorded—that is, after a sufficient number of disease-symptom complex combination cards have been obtained—the entire deck of such cards is ready to be used.

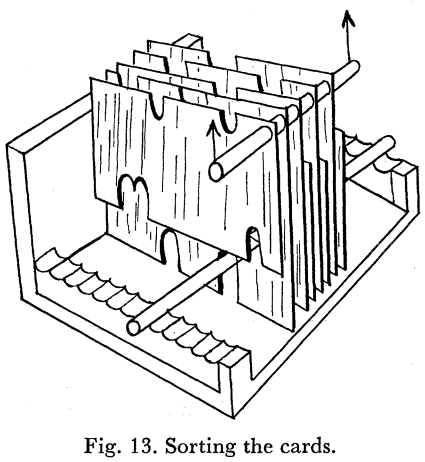

Fig. 13. Sorting the cards.

The cards are sorted as illustrated in Fig. 13. To separate those cards that are notched in a certain position from those that are unnotched in that position, put a rod in the corresponding position and the notched cards will fall; the unnotched cards will not fall. Then, by means of a rod through the holes in the upper right-hand corner of the cards, the unnotched cards are removed from the notched ones.

To make a diagnosis, sort out those cards that correspond to the symptom complex presented by the patient. The disease complex part of these cards gives all possible disease complexes the patient can have. Separate these cards by the symptom complexes: the thicknesses of the resulting separated decks will be proportional to the probability of the patient's having the respective disease complexes (see Fig. 14).

To determine $P(C_i)$, sort the cards for C_i; then $P(C_i)$ is the ratio of the thickness of the sorted cards to the thickness of the entire deck of cards. To determine $P(C^k|C_i)$, sort the cards for C_i and measure their thickness; then sort these for C^k and measure their thickness; then $P(C^k|C_i)$ is the ratio of the former to the latter measurements.

After each diagnosis is made, a card is notched accordingly and placed with the deck. Old cards are periodically thrown away. This keeps the statistics current. In general, the decks will grow exceedingly rapidly. In a clinic it is often normal to diagnose over 100 patients per day; at this rate only 10 days will result in 1000 cards.

It is important to observe that we are using past diagnoses to aid in making future diagnoses. Any wrong past diagnoses may therefore lead to a perpetuation of errors. Hence it is clear that only carefully evaluated or definitely verified diagnoses should be used in making up the deck, or at least there should be provision for review and removal of incorrect diagnoses.

Conclusions

Three factors are involved in the logical analysis of medical diagnosis: (i) medical knowledge that relates disease complexes to symptom complexes; (ii) the particular symptom complex presented by the patient; (iii) and the disease complexes that are the final diagnosis. The effect of medical knowledge is to eliminate from consideration disease complexes that are not related to the symptom complex presented. The resulting diagnosis computed by means of logic is essentially a list of the possible disease complexes that the patient can have that are consistent with medical knowledge and the patient's symptoms. Equation 2 is the fundamental formula for the logical analysis of medical diagnosis.

The "most likely" diagnosis is determined by calculating the conditional probability that a patient presenting these symptoms has each of the possible disease complexes under consideration. This probability depends upon two contributing factors. The first factor is the conditional probability that a patient

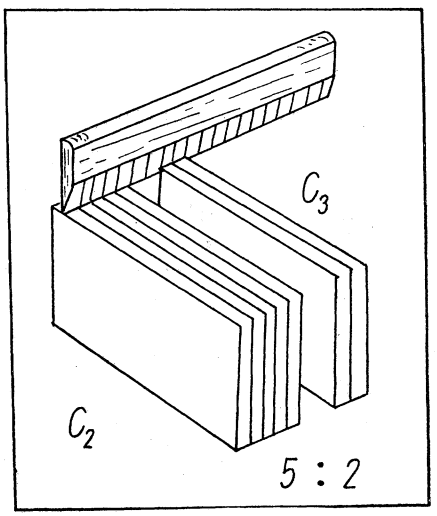

Fig. 14. For a patient presenting symptom complex C^1, the conditional probabilities for diagnoses C_2 and C_3 are read from the respective thicknesses of the decks as $P(C_2|C^1) = 5/(5+2)$ and $P(C_3|C^1) = 2/(5+2)$.

with a certain disease complex will have a particular symptom complex (that is, just the reverse of the afore-mentioned conditional probability); it remains relatively independent of local factors and depends primarily on the physiopathological effects of the disease complex itself. The second factor is the effect on the medical diagnosis of the circumstances surrounding the patient or, more precisely, the total probability that *any* person chosen from the particular population sample under consideration will have the particular disease complex under consideration; this may depend on the geographical location of the population sample, or the season when the sample is chosen, or whether the population sample is chosen during an epidemic, or whether the sample is composed of patients visiting a particular type of specialist or clinic, and so forth.

The afore-mentioned probabilities are continually changing; each diagnosis, as it is made, itself becomes a statistic that changes the value of these probabilities. Such changing probabilities reflect the spread of new epidemics, or new strains of antibiotic-resistant bacteria, or the discovery of new and better techniques of diagnosis and treatment, or new cures and preventive measures, or changes in social and economic standards, and so forth. This observation emphasizes the greater significance and value of current statistics; it depreciates the significance of past statistics. Equation 8 above, which is an adaptation of Bayes' formula, summarizes the probabilistic analysis of medical diagnosis.

Use of value theory enables the systematic computation of the optimum strategy to be used in any situation. It does not, however, determine the values of the treatments involved. It is quite evident that the choice of such values involves intangibles which must be evaluated and judged by the physician. However, by clearly separating the strategy problem from the values judgment problem, the physician is left free to concentrate his whole attention on the latter. One of the most important and novel contributions to the value theory for our purpose is the concept of the mixed strategy for approaching value decisions.

The mathematical techniques that we have discussed and the associated use of computers are intended to be an aid to the physician. This method in no way implies that a computer can take over the physician's duties. Quite the reverse; it implies that the physician's task may become more complicated. The physician may have to learn more; in addition to the knowledge he presently needs, he may also have to know the methods and techniques under consideration in this paper. However, the benefit that we hope may be gained to offset these increased difficulties is the ability to make a more precise diagnosis and a more scientific determination of the treatment plan (*15*).

References and Notes

1. See, for example: C. F. Paycha, "Mémoire diagnostique," *Montpellier méd.* 47, 588 (1955) (punched-card symptom registration for differential diagnosis of ophthalmological diseases); "Diagnosis by slide rule," *What's New* (Abbott Labs.) No. *189* (1955); F. A. Nash, "Differential diagnosis: an apparatus to assist the logical faculties," *Lancet* 1, 874 (1954); E. Baylund and G. Baylund, "Use of record cards in practice, prescription and diagnostic records," *Ugeskrift Laeger* 116, 3 (1954); "Ereignisstatistik und Symptomenkunde" (Incidence statistics and symptomatology), *Med. Monatsschr.* 6, 12 (1952); M. Lipkin and J. D. Hardy, "Mechanical correlation of data in differential diagnosis of hematological diseases," *J. Am. Med. Assoc.* 166, 2 (1958).
2. L. B. Lusted, "Medical electronics," *New Engl. J. Med.* 252, 580 (1955) (a review with 53 references).
3. L. Clendening and E. H. Hashinger, *Methods of Diagnosis* (Mosby, St. Louis, Mo., 1947), chaps. 1 and 2.
4. For the purposes of this paper, the terms *symptom, sign,* and *laboratory test* are considered as synonymous. The physician must determine whether a symptom exists or not.
5. R. S. Ledley, "Mathematical foundations and computational methods for a digital logic machine," *J. Operations Research Soc. Am.* 2, 3 (1954).
6. R. S. Ledley, "Digital computational methods in symbolic logic with examples in biochemistry," *Proc. Natl. Acad. Sci. U.S.* 41, 7 (1955), where f is determined by finding a consequence solution of the form $G \rightarrow f$ to the "equations" E.
7. R. S. Ledley, *Digital Computer and Control Engineering* (McGraw-Hill, New York), in press.
8. J. V. Uspensky, *Introduction to Mathematical Probability* (McGraw-Hill, New York, 1937).
9. J. von Neumann and O. Morgenstern, *Theory of Games and Economic Behavior* (Princeton Univ. Press, Princeton, N.J., 1944).
10. R. D. Luce and H. Raiffa, *Games and Decisions* (Wiley, New York, 1957).
11. Rand Corporation, *A Million Random Digits with 100,000 Normal Deviates* (Free Press, Glencoe, Ill., 1955).
12. M. G. Kendall and B. Babington Smith, *Tables of Random Sampling Numbers,* "Tracts for Computers XXIV" (Cambridge Univ. Press, Cambridge, 1939).
13. J. D. Williams, *The Compleat Strategyst* (McGraw-Hill, New York, 1954).
14. D. E. Clark, "Association of irradiation with cancer of the thyroid in children and adolescents," *J. Am. Med. Assoc.* 159, 1007 (1955).

15. We are grateful to Thomas Bradley of the National Academy of Sciences–National Research Council, and to George Schonholtz of the Walter Reed Army Medical Center, and to Scott Swisher of the University of Rochester Medical School for their encouragement and advice in connection with this study.